Z45X Resilient seat gate valve

弹性座封闸阀采用特种橡胶全包裹整体式弹性阀芯结构，和一毂闸阀相比不存在漏水或生锈等现象。克服了它们普遍存在的密封不良、弹性疲劳、橡胶老化及密封副童损生锈等缺陷。充分利用弹性密封产生微量变形的补偿作用达到良好的密封效果。可广定用于供水、石化、冶金、船舶、食品医药及能源系统等流体管路上作为调节和截流装置使用。

Rellent seated gate valves made of speclal rubber elastlcly full wrap-piece valve structure, and the general absence of gate leakage or rust compared to other phenomena. Overcome their common seal bad, elastic fatigue, wear rubber aging and Sealing ruts and other defects、 Produced by ths elastic saeling full compensation of small quantities of deformation to achieve a good sealing effect. It can be widely used in water supply, petrochemical, metallurgy, shipbuilding, food, pharmaceuticals and energy systems and other fluid line is used as a regulator and shut-off devices.

产品特性 Characteristic of products

1. 整体包胶：阀芯采用高性能橡胶和最新的硫化技术进行整体包覆，贴合紧密牢固，几何尺寸精确，密封可靠，使用寿命长。
   The overall package of plastic: the spool and the latest high-performance rubber vulcanization technology overall coating. laminating are tight. accurate geometry, rellable sealing and long service life.

2. 重量轻：阀体球墨铸铁材料。重量较一般闸阀减轻25%，安装维修方便；阀门最大打开高度一般闸阀低67mm-280mm，可安装有空间限制的场合。
   Light weight: body ductile iron material, gate valve to reducs weight than tha average 25%, easy installation and maintenance; gate valve maximum opening helght is generally low 60mm ~ 280mm, can be Installed where space is llmited.

3. 平底式阀座：底部采用与管道相同的平底式阀座设计，不会产生杂物维积，流道畅通无阻且密封可靠。
   Flat style seat: The bottom of the pipe the same flat style seat design, does not produce debris accumulation, flow channel unimpeded and reliable sealing.

4. 耐蚀性能：阀门内腔采用无毒环氧树脂粉末涂装，内件采铜合金和不锈钢可防止腐蚀和生锈。
   Corrosion resistance: the valve cavity using non-toxic epoxy powder coating, inner parts mining copper alloy and stainless steel to prevent corrosion and rust.

5. 三“O”密封：阀杆上密封处采用O型圈密封，摩擦阻力小，开关轻巧不漏水。
   The three 'O' seal: the use of the stem seal O-ring seals, friction is small, lightweight and watertight gwitch.

设计标准 Design standard

Design Code:	EN593, API609
Size Range:	DN40-600, NPS 1.5"-24"
Face to Face:	BS5163, DIN3202 F4, API6
End Flange:	BS 4504 PN6/PN10/PN16, DIN2501 PN6/PN10/PN16, ISO 7005 PN6/PN10/PN16, JIS 5K/10K/16K, ASME B16.1 125LB, ASME B16.1 150LB, AS 2129 Table D and E, BS10 Table D and E
Test inspection:	EN 12266-1, API 598

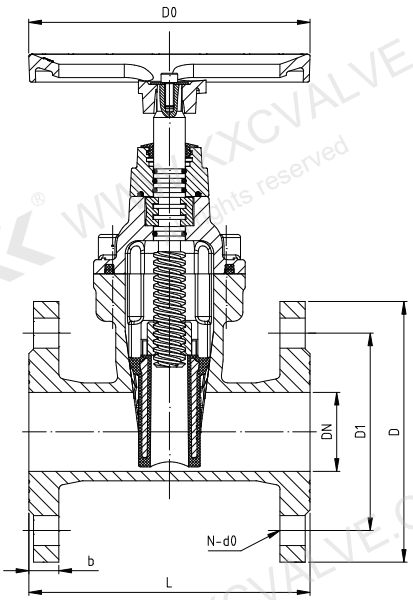

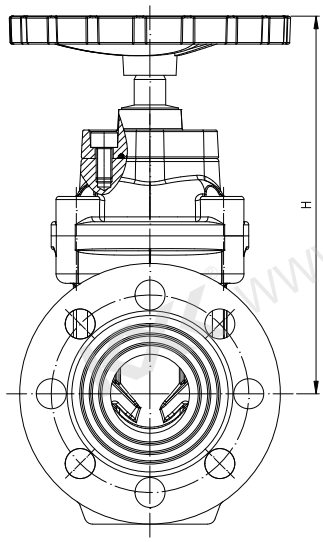

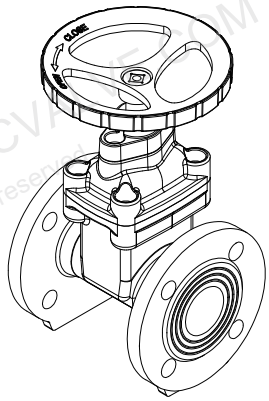

SIZE		D				D1				L			H	n-d				b				D0
DN	in	10	16	25	150LB	10	16	25	150LB	DIN	BS	ASME		10	16	25	150LB	10	16	25	150LB	
50	2	165			150	125			120.7	150	178	177.8	235	4-19		4-19	4-19	19			14.3	160
65	2.5	185			180	145			139.7	170	190	190.5	265	4-19		8-19	4-19	19			15.9	160
80	3	200			190	160			152.4	180	203	203.2	290	8-19		8-19	4-19	18-19			17.5	200
100	4	220	220	235	230	180	180	190	190.5	190	229	228.6	320	8-19		8-22	8-19	18-19			22.3	200
125	5	250	250	270	255	210	210	220	215.9	200	254	254	380	8-19		8-26	8-22	18		24	22.3	260
150	6	285	285	300	280	240	240	250	241.3	210	267	266.7	40	8-23		8-26	8-22	19		24	23.9	260
200	8	340	340	360	345	295	295	310	298.5	230	292	292.1	520	8-23	12-23	12-26	8-22	20		24	27	330
250	10	405	405	425	405	350	355	370	362	250	330	330.2	630	12-23	12-28	12-30	12-26	22		27	28.6	400
300	12	460	460	485	485	400	410	430	431.8	270	356	355.6	720	12-23	12-28	16-30	12-26	24	22	27	30.2	400
350	14	520	520	555	535	460	470	490	476.3	290	381	381	800	16-23	16-28	16-33	16-29	25		30	33.4	465
400	16	580	580	620	595	515	525	550	539.8	310	406	406	850	16-28	16-31	16-36	16-29	28		33	35	465
450	18	640	640		635	565	585		577.9	330	432	432	1000	20-28	20-31		16-32	29			38.1	465
500	20	715	715		700	620	650		635	350	457	457.2	1200	20-28	20-31		20-32	31			41.3	630
600	24	840	840		815	725	770		749.3	390	508	508	1350	20-31	20-38		20-35	33			46.1	630

H and D0 are only for reference, actual dimension may be a little different.

主要性能参数 Performance specification

公称压力 Nominal pressure	公称通径 Nominal diameter	试验压力 Test pressure		工作温度	适用介质
PN(Mpa)	DN(mm)	壳体 Shell	密封 Seal		
1.0	40-600	1.5	1.1	≤80℃	清水、源水、污水、空气、油品 Water、Source Water、Sewage、Air、Oil
1.6		2.4	1.76		
2.5		3.8	2.75		